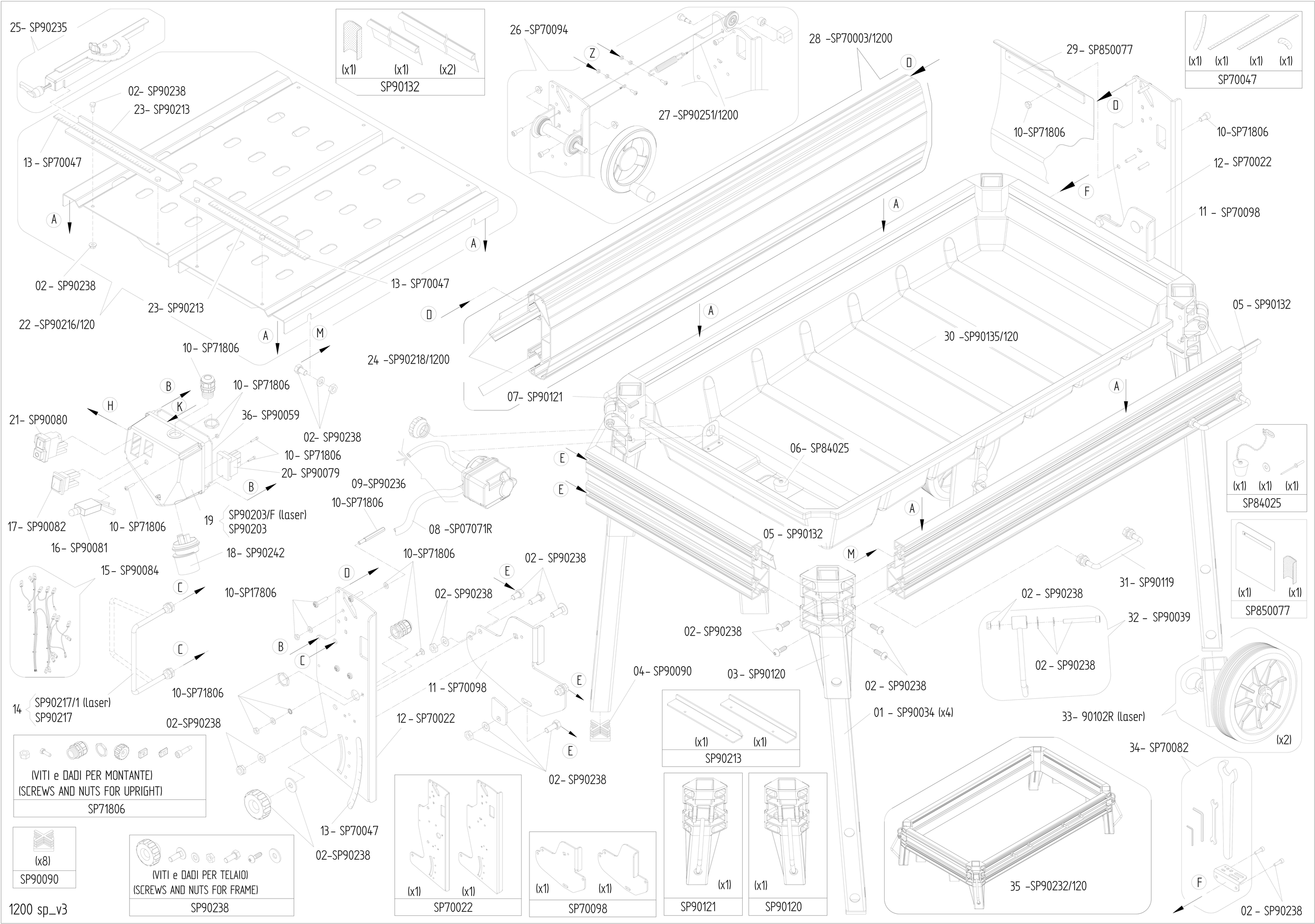
25- SP90235
02- SP90238
23- SP90213
13 - SP70047
A
02 - SP90238
22 -SP90216/120
23- SP90213
13- SP70047
A
M
10- SP71806
24 -SP90218/1200
B
10- SP71806
H
K
21- SP90080
36- SP90059
02- SP90238
10- SP71806
20- SP90079
B
09-SP90236
10-SP71806
17- SP90082
10- SP71806
19
SP90203/F (laser)
SP90203
08 -SP07071R
16- SP90081
18- SP90242
10-SP71806
15- SP90084
C
10-SP17806
D
02- SP90238
E
02- SP90238
C
B
C
10-SP71806
11 - SP70098
E
14
SP90217/1 (laser)
SP90217
12 - SP70022
02-SP90238
E
02- SP90238
13- SP70047
02-SP90238
(VITI e DADI PER MONTANTE)
(SCREWS AND NUTS FOR UPRIGHT)
SP71806
(x8)
SP90090
(VITI e DADI PER TELAIO)
(SCREWS AND NUTS FOR FRAME)
SP90238
(x1) (x1)
SP70022
(x1) (x1)
SP70098
(x1) (x1) (x2)
SP90132
26 -SP70094
Z
27 -SP90251/1200
28 -SP70003/1200
D
07- SP90121
A
A
30 -SP90135/120
A
29- SP850077
D
10-SP71806
F
10-SP71806
12- SP70022
11 - SP70098
05 - SP90132
E
E
06- SP84025
A
05 - SP90132
M
02- SP90238
04- SP90090
03- SP90120
02 - SP90238
01 - SP90034 (x4)
31- SP90119
02 - SP90238
32 - SP90039
02 - SP90238
33- 90102R (laser)
(x1) (x1)
SP90213
(x1) (x1)
SP90121
(x1) (x1)
SP90120
35 -SP90232/120
34- SP70082
F
02 - SP90238
(x1) (x1) (x1) (x1)
SP70047
(x1) (x1) (x1)
SP84025
(x1) (x1)
SP850077
1200 sp_v3

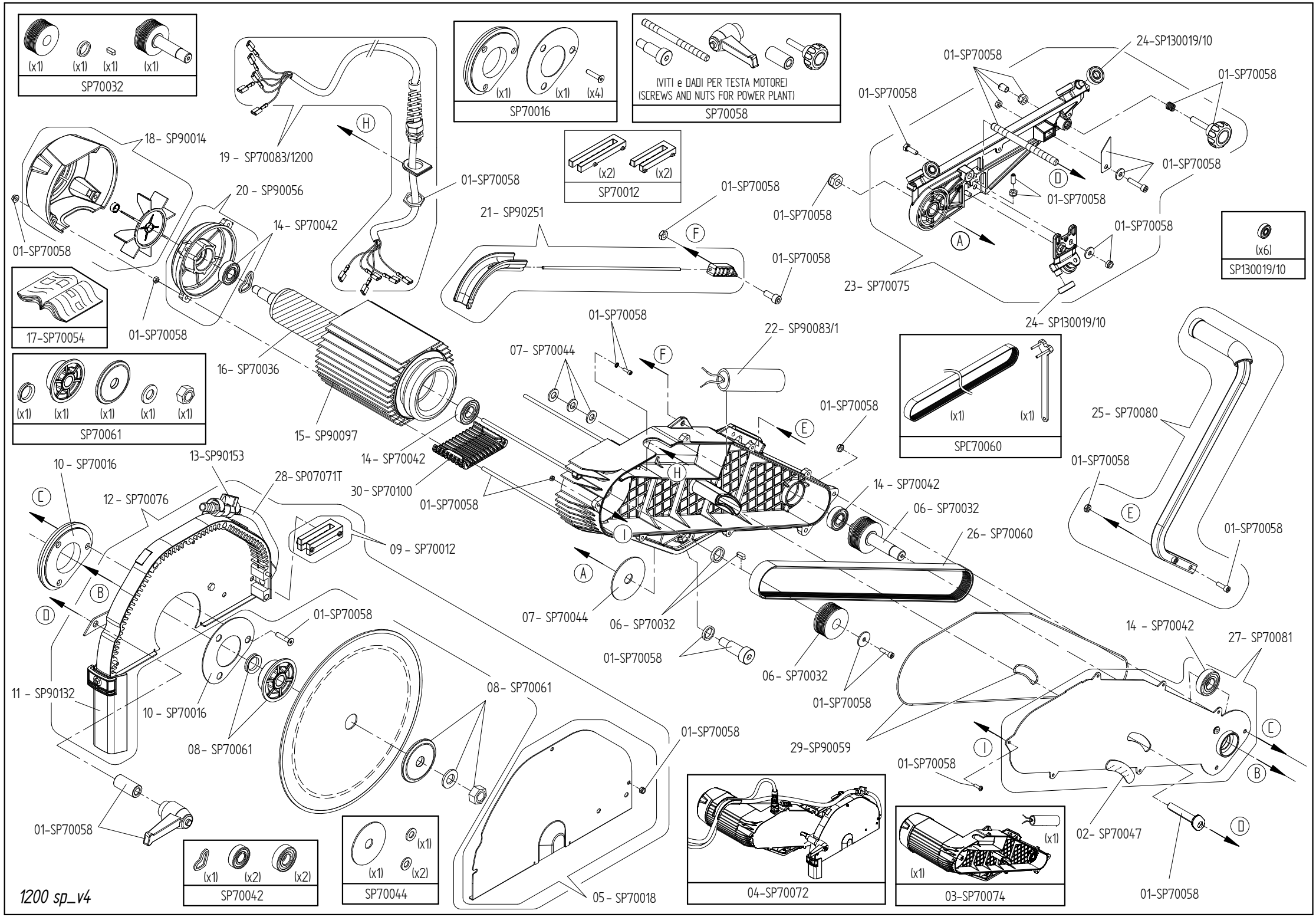
(x1) (x1) (x1) (x1)
SP70032
(x1) (x1) (x4)
SP70016
(VITI e DADI PER TESTA MOTORE)
(SCREWS AND NUTS FOR POWER PLANT)
SP70058
(x2) (x2)
SP70012
(x6)
SP130019/10
17-SP70054
(x1) (x1) (x1) (x1) (x1)
SP70061
(x1) (x1)
SPC70060
(x1) (x2) (x2)
SP70042
(x1) (x1) (x2)
SP70044
04-SP70072
(x1) (x1)
03-SP70074
18- SP90014
19 - SP70083/1200
20 - SP90056
14- SP70042
01-SP70058
21- SP90251
16- SP70036
15- SP90097
14- SP70042
30- SP70100
07- SP70044
22- SP90083/1
24-SP130019/10
23- SP70075
25- SP70080
26- SP70060
06- SP70032
14 - SP70042
10 - SP70016
13-SP90153
28- SP07071T
12 - SP70076
09 - SP70012
11 - SP90132
08- SP70061
27- SP70081
29-SP90059
02- SP70047
05 - SP70018
A
B
C
D
E
F
H
I

1200 sp_v4

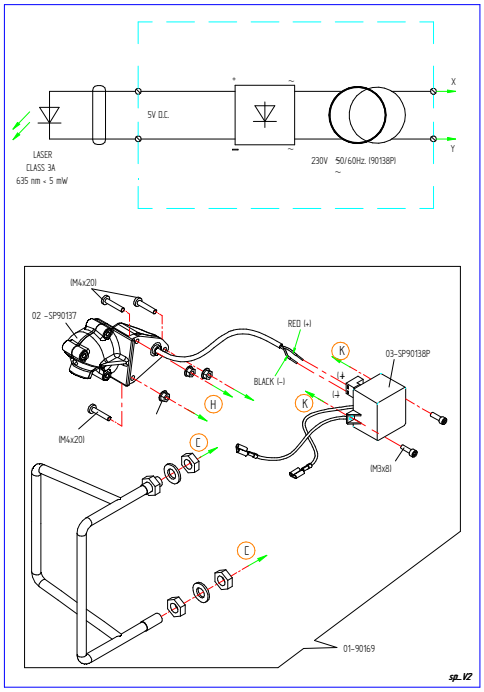
5V D.C.
X
Y
LASER
CLASS 3A
635 nm < 5 mW
230V 50/60Hz. (90138P)
(M4x20)
02 - SP90137
RED (+)
BLACK (-)
03-SP90138P
(M4x20)
(M3x8)
01-90169
SP_V2